DocuSign Envelope ID: 54D80F86-CD59-4AAA-BE65-00818932FC52

6/2/99

PAVEMENT SCHEDULE (FINAL PAVEMENT DESIGN)	
C1	PROP. APPROX. 1.5″ ASPHALT CONCRETE SURFACE COURSE TYPE S9.5B, AT AN AVERAGE RATE OF 168 LBS. PER SQ. YD.
C2	PROP. APPROX. 3″ ASPHALT CONCRETE SURFACE COURSE TYPE S9.5B, AT AN AVERAGE RATE OF 168 LBS. PER SQ. YD. IN EACH OF TWO LAYERS.
D1	PROP. APPROX. 2½″ ASPHALT CONCRETE INTERMEDIATE COURSE, TYPE I19.0B, AT AN AVERAGE RATE OF 285 LBS. PER SQ. YD.
E1	PROP. APPROX. 4″ ASPHALT CONCRETE BASE COURSE, TYPE B25.0B, AT AN AVERAGE RATE OF 456 LBS. PER SQ. YD.
E2	PROP. VAR. DEPTH ASPHALT CONCRETE BASE COURSE, TYPE B25.0B, AT AN AVERAGE RATE OF 114 LBS. PER SQ. YD. PER 1″ DEPTH. TO BE PLACED IN LAYERS NOT LESS THAN 3″ IN DEPTH OR GREATER THAN 5½″ IN DEPTH.
R1	5″ MONOLITHIC ISLAND (KEYED-IN)
T	SHOULDER RECONSTRUCTION WITH AGGREGATE SHOULDER BORROW.
U	EXISTING PAVEMENT.

NOTE: PAVEMENT EDGE SLOPES ARE 1:1 UNLESS SHOWN OTHERWISE.

CALYX
ENGINEERS + CONSULTANTS
6750 TRYON ROAD
CARY, NC 27518
phone: 919.851.1912
CALYXengineers.com
NC License # F-1333
Formerly McKay Engineers & Consultants

PROJECT REFERENCE NO.	SHEET NO.
W-5203W	2A-2

ROADWAY DESIGN ENGINEER
NORTH CAROLINA PROFESSIONAL SEAL 045759 ENGINEER STEPHEN C. BRONDE
DocuSigned by: Stephen C. Bronde
5/18/2016

PAVEMENT DESIGN ENGINEER
NORTH CAROLINA PROFESSIONAL SEAL 022896 ENGINEER CLARK S. MORRISON
DocuSigned by: Clark S. Morrison
5/18/2016

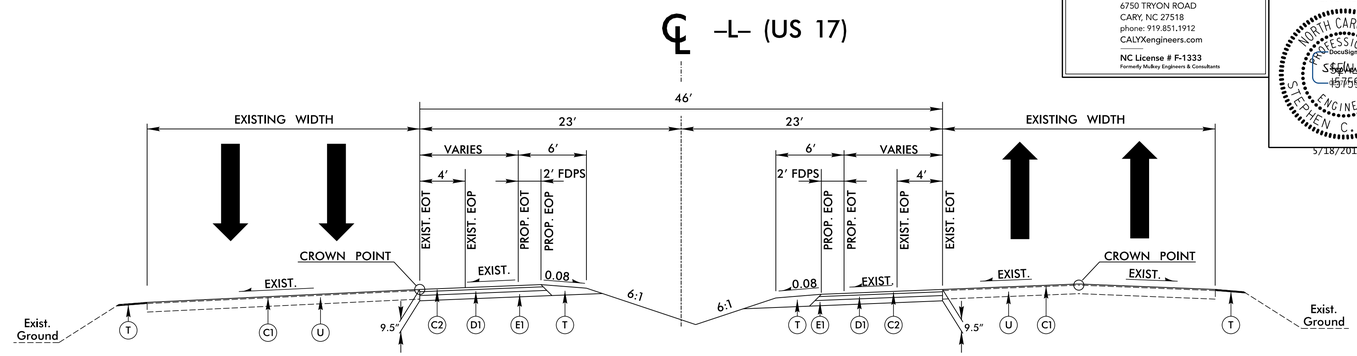

TYPICAL SECTION NO. 1

TYPICAL SECTION NO. 1

USE TYPICAL SECTION NO.1 FOR
MEDIAN TURN LANE
SEE PLANS FOR TAPER LENGTHS AND LOCATIONS
–L– STA. 17+50± TO –L– STA. 25+63±
–L– STA. 26+57± TO –L– STA. 39+30±

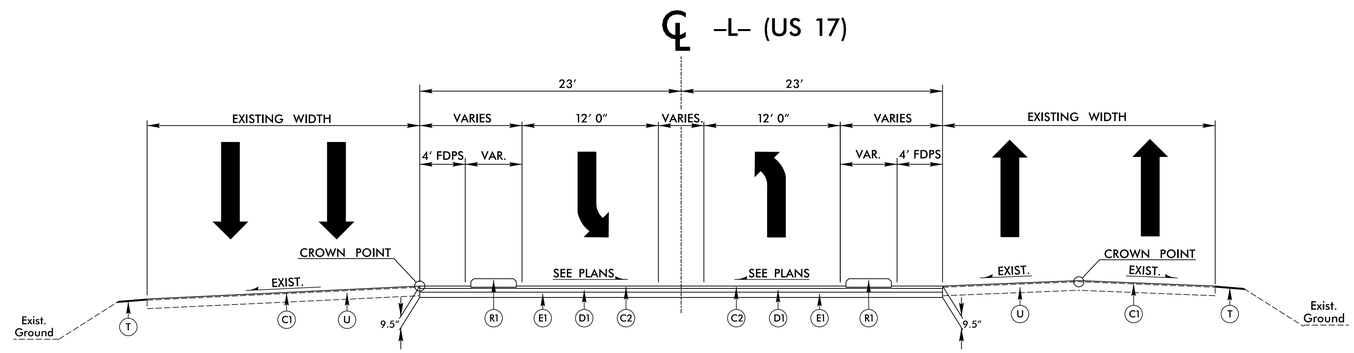

TYPICAL SECTION NO. 2

TYPICAL SECTION NO. 2

USE TYPICAL SECTION NO. 2 FOR
MEDIAN CROSSOVER LANE
SEE PLANS FOR TAPER LENGTHS AND LOCATIONS
–L– STA. 25+63± TO –L– STA. 26+57± MED
–L– STA. 39+30± TO –L– STA. 40+15± MED

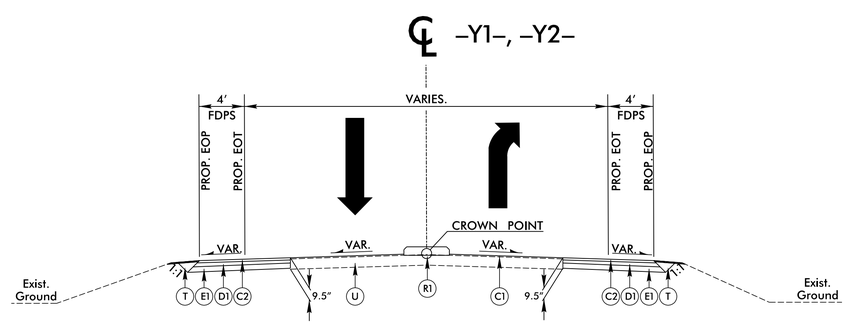

TYPICAL SECTION NO. 3

TYPICAL SECTION NO. 3

USE TYPICAL SECTION NO. 3 FOR
–Y1– STA. 13+19± TO –Y1– STA. 14+31±
–Y2– STA. 10+65± TO –Y2– STA. 12+18±

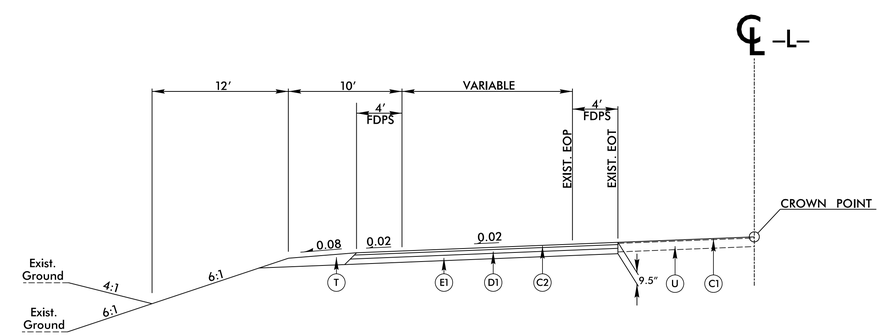

TYPICAL SECTION NO. 4

TYPICAL SECTION NO. 4

USE TYPICAL SECTION NO. 4 FOR
U-TURN BULBOUT LOCATIONS
–L– STA. 37+75± TO –L– STA. 40+04± LT

5/16/2016
R:\Roadway\Proj\W-5203W_rdy_TYP.dgn
ekevins